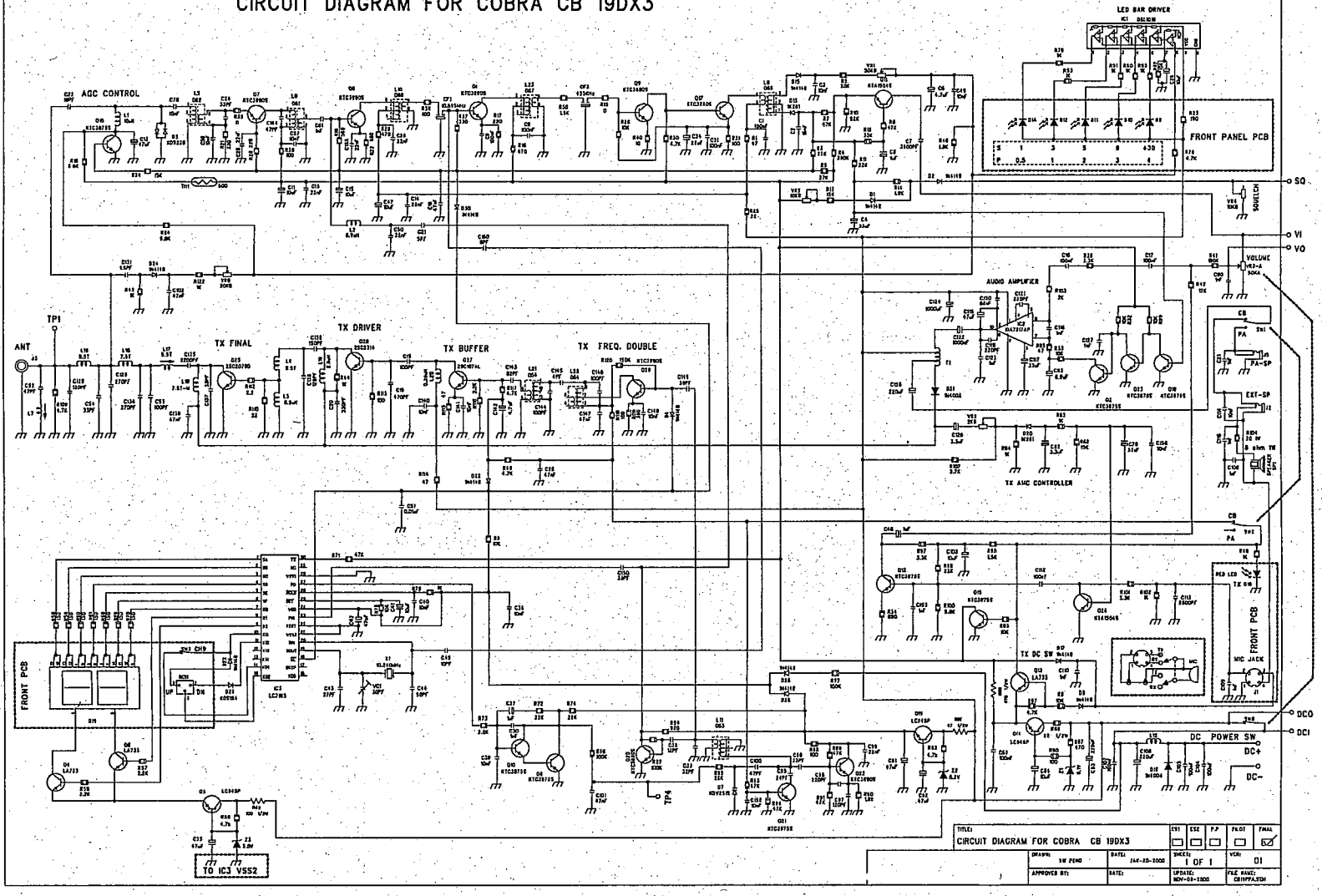CIRCUIT DIAGRAM FOR COBRA CB 19DX3